Innovative Truck Bed Dolly™

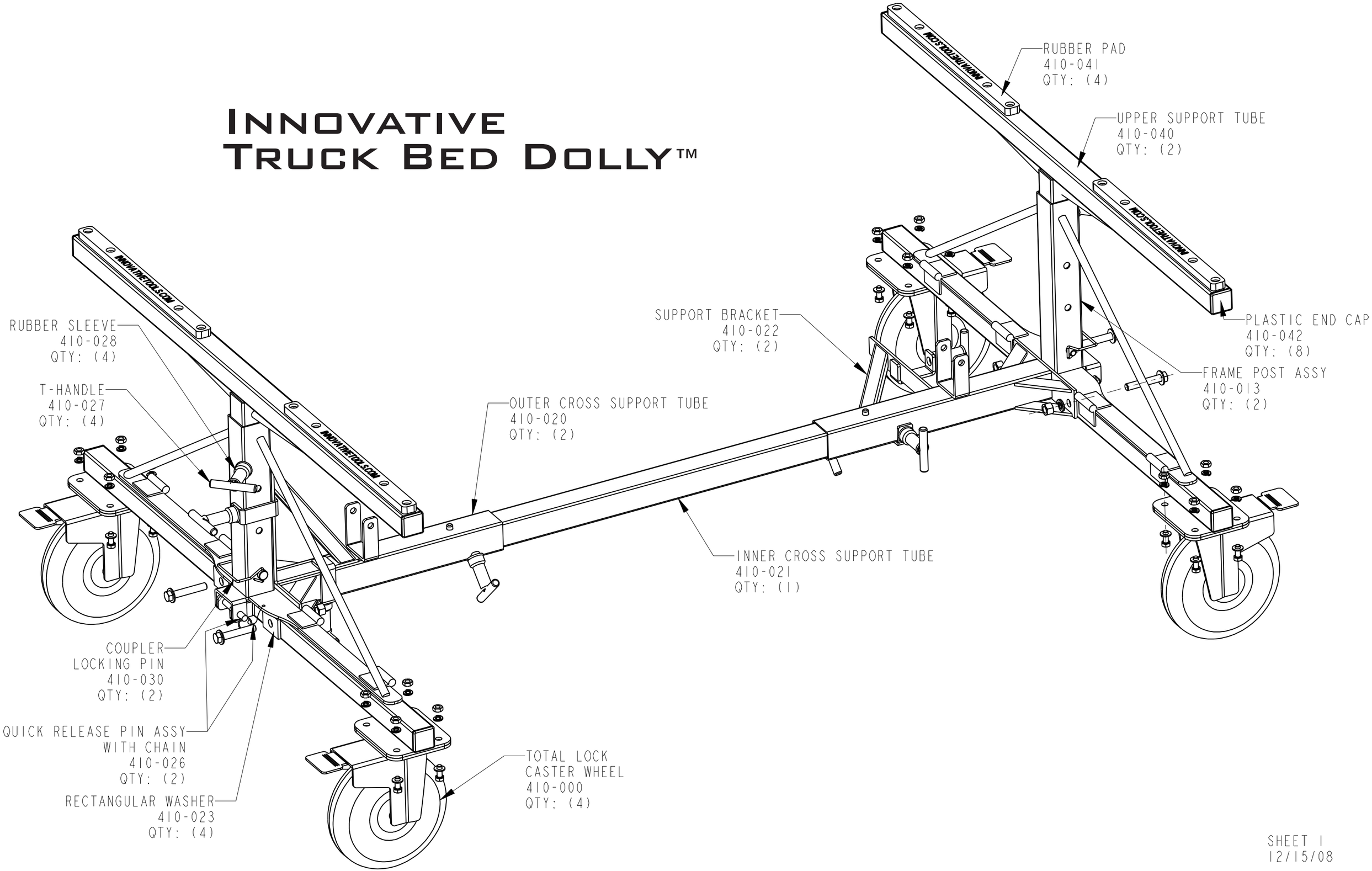

SHEET 1
12/15/08